Mechanisms of CD4 Downregulation by the Nef and Vpu Proteins of Primate Immunodeficiency Viruses

O. Wolf Lindwasser, Rittik Chaudhuri and Juan S. Bonifacino*

Cell Biology and Metabolism Branch, National Institute of Child Health and Human Development, National Institutes of Health, Bethesda, MD 20892, USA

Abstract: Human immunodeficiency virus type 1 (HIV-1), human immunodeficiency virus type 2 (HIV-2), and simian immunodeficiency virus (SIV) are the etiological agents of acquired immunodeficiency syndrome (AIDS) in humans and a related disease in non-human primates. These viruses infect T cells and macrophages that express the surface glycoprotein, CD4, because this glycoprotein acts as a co-receptor for incoming virus particles. Once infection has occurred, however, the presence of CD4 poses problems for the virus life cycle, including the possibility of superinfection, premature binding of CD4 to nascent virus particles, and inhibition of virus release. Accordingly, primate immunodeficiency viruses have evolved at least two distinct mechanisms, mediated by the Nef and Vpu viral proteins, to "downregulate" CD4 in the host cells. Nef and Vpu are mainly expressed early and late, respectively, in the viral life cycle, ensuring continuous removal of CD4. Nef links mature CD4 to components of clathrin-dependent trafficking pathways at the plasma membrane, and perhaps in intracellular compartments, leading to internalization and delivery of CD4 to lysosomes for degradation. Vpu, on the other hand, interacts with newly-synthesized CD4 in the endoplasmic reticulum, linking CD4 to the SCF ubiquitin ligase and facilitating the entry of CD4 into the endoplasmic-reticulum-associated degradation pathway. These two mechanisms lead to a dramatic reduction of CD4 expression in infected cells and are essential for efficient virus replication and disease progression.

Keywords: AIDS, HIV, CD4, Vpu, Nef, clathrin, ERAD, β-TrCP.

1. INTRODUCTION

The human immunodeficiency viruses, HIV-1 and HIV-2, are the etiological agents of acquired immunodeficiency syndrome (AIDS) in humans. The simian immunodeficiency viruses (SIV) are a diverse set of pathogenic and non-pathogenic viruses isolated from non-human primates (reviewed in [1]) that are closely related to HIV and can also cause immunodeficiency diseases (simian AIDS). Because of the slowly-progressing nature of human and simian AIDS, these viruses are classified as lentiviruses (***lenti***: slow), a family within the larger class of RNA viruses known as retroviruses. Of the two human immunodeficiency viruses, HIV-1 is the most virulent and has had a larger impact on public health. Therefore, the majority of research has focused on HIV-1.

HIV-1 infects and replicates in cells that express the cell surface glycoprotein, CD4. CD4-positive (CD4+) cells include macrophages and a subset of T cells (***i.e.,*** T lymphocytes) known as "helper", which are central players in innate and adaptive immunity, respectively. Tropism for CD4+ cells results from the ability of the envelope (Env) glycoprotein of HIV-1 to bind to CD4 in conjunction with a chemokine receptor, mainly CCR5 on macrophages or CXCR4 on T cells. CD4 and the chemokine receptors are thus referred to as "co-receptors" for HIV-1 binding to the host cells. HIV-1 infection eventually leads to depletion of CD4+ helper T cells by a mechanism that is poorly understood. Loss of these cells is the chief contributor to the destruction of the immune system in AIDS.

CD4 is a type I transmembrane glycoprotein that normally functions in cooperation with the T-cell antigen receptor (TCR) to recognize antigens presented by major histocompatibility complex type II (MHC-II) molecules on professional antigen-presenting cells (APCs) [2]. This interaction is a first step in the activation of the immune response, and CD4+ T cells play a central role in stimulating the production of antibodies and the proliferation of other T cells. CD4 binds ***via*** its cytoplasmic tail to the Lck non-receptor tyrosine kinase. These two proteins traffic together [3] ***via*** the biosynthetic pathway to the plasma membrane, where they remain as a stable complex until stimulated by contact with an APC. This contact brings CD4 and Lck together with the TCR, initiating a series of intracellular signaling events that ultimately lead to T-cell activation. CD4 is then rapidly internalized into endosomes from where it is delivered to lysosomes or recycled to the plasma membrane.

As with all other plasma membrane proteins, CD4 is found in small amounts within all endomembrane systems, including the secretory, endocytic, lysosomal and recycling pathways. The presence of CD4 within compartments of these systems as well

*Address correspondence to this author at the Cell Biology and Metabolism Branch, National Institute of Child Health and Human Development, Building 18T/Room 101, National Institutes of Health, Bethesda, MD 20892, USA; Tel: 301-496-6368; Fax: 301-402-0078; E-mail: juan@helix.nih.gov

1566-5240/07 $50.00+.00 © 2007 Bentham Science Publishers Ltd.

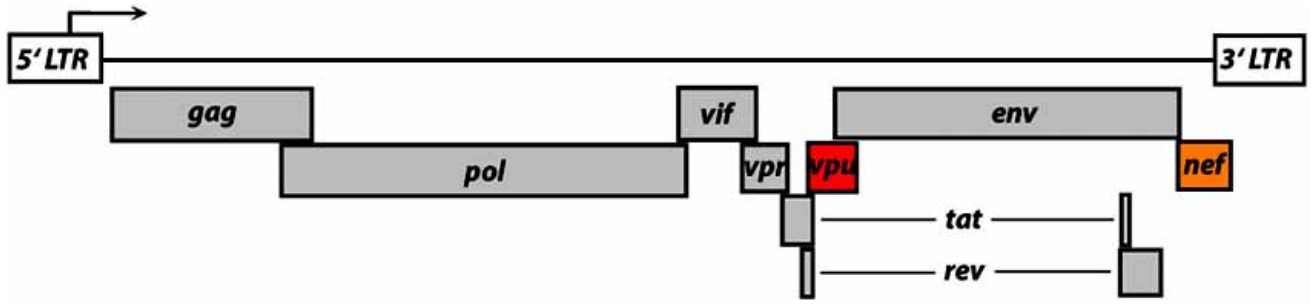

Fig. (1). HIV-1 genome. The HIV-1 genome is 9.2 kb in length (GenBank accession number AF033819). Principle features are presented here in diagrammatic form, including the 5' and 3' long terminal repeats (LTR); the major genes ***gag***, ***pol***, and ***env***; and the accessory genes ***vif***, ***vpr***, ***tat***, ***rev***, ***vpu***, and ***nef***. The positions of ***vpu*** and ***nef***, the focus of this review, are highlighted in color.

as on the cell surface poses several problems for HIV-1 replication. These include retention of budding virions within infected cells and the possibility of superinfection, the latter of which increases the cytopathic effects on host cells [4,5]. It is thus not surprising that HIV-1 has evolved means to reduce the levels of both intracellular and surface CD4 (for previous reviews see references [6] and [7]). This reduction, referred to as "downregulation", is essential for the efficient replication of HIV-1 in cultured cells [8,9].

Downregulation of CD4 by HIV-1 occurs by at least two mechanisms, which are mediated by the products of the ***nef*** and ***vpu*** viral genes, and to some extent by the ***env*** gene[1]. HIV-1 is remarkably efficient, having only nine genes to accomplish many complex tasks during its life cycle. Like all retroviruses, it contains three major genes, ***gag***, ***pol*** and ***env***, which are responsible for virus assembly, enzymatic functions, and viral entry, respectively (Fig. (**1**)). In addition, HIV-1 contains a set of "accessory genes" that are responsible for diverse functions required for optimal viral fitness, including transcriptional regulation, viral mRNA export and the inhibition of host-cell viral restriction factors. The products of two such accessory genes, Nef and Vpu, are multifunctional proteins. This is not surprising given that the virus must accomplish much with a tiny genome. Their only known shared function is CD4 downregulation, although they accomplish this at different cellular locations and by different mechanisms (Fig. (**2**)). Indeed, whereas Nef acts on mature CD4 in the endocytic or late secretory pathways (***i.e.***, at the plasma membrane, endosomes or the ***trans***-Golgi network [TGN]), Vpu functions to target newly-synthesized CD4 from the endoplasmic reticulum (ER) into the ER-associated degradation (ERAD) pathway. The timing of Nef and Vpu expression differs as well. Nef is expressed very early in the infection cycle, before nearly all other viral proteins. Vpu, on the other hand, is made later, when the viral structural genes are expressed. Presumably, this is because, in addition to downregulating CD4, Nef has other effects that revolve around "reprogramming" the cell (***i.e.,*** creating the right environment for replication of the virus). The functions of Vpu, on the other hand, relate more specifically to viral assembly and prevention of CD4 incorporation into particles, events that are more important late in the viral life cycle. Env is also believed to contribute to the downregulation of CD4, as previous studies have shown that the Env glycoprotein gp160 binds to CD4 in the ER and prevents its transport to the cell surface [10-12]. However, this effect is reciprocal, since gp160 is also retained in the ER when it is bound to CD4 [13]. Hence it is unclear whether downregulation of CD4 is a specific function of Env or whether it is an unintentional consequence of Env expression.

This review focuses on recent advances in the understanding of the mechanisms of downregulation of CD4 by Nef and Vpu. Most of our discussion deals primarily with HIV-1, because it is the most extensively studied of the primate immunodeficiency viruses. Wherever relevant, however, we mention similarities and differences with HIV-2 and SIV.

2. NEF

2.1. Key Role of Nef in Disease Progression

Nef is an important determinant of viral pathogenicity. A critical role for ***nef*** in the development of AIDS is supported by studies on patients —referred to as "long-term non-progressors" (LTNPs) — that do not manifest symptoms of AIDS for 10 years or longer after infection with HIV-1. Many of these patients were found to carry a virus lacking ***nef*** [14-16]. Further evidence for the role of ***nef*** in disease progression is provided by studies of SIV in rhesus macaques. As with humans, deletion of ***nef*** reduced the pathogenic potential of the virus, and dramatically delayed the onset of AIDS [17]. In fact, the virus appeared to be under strong selective pressure to express Nef. When macaques were infected with an engineered SIV strain that contained a premature stop codon in the ***nef*** gene, the open reading frame was rapidly and completely restored [17].

[1] We will follow the standard convention, using lower case italics when referring to viral genes, and capitalized roman type when referring to gene products (e.g. ***nef*** and Nef).

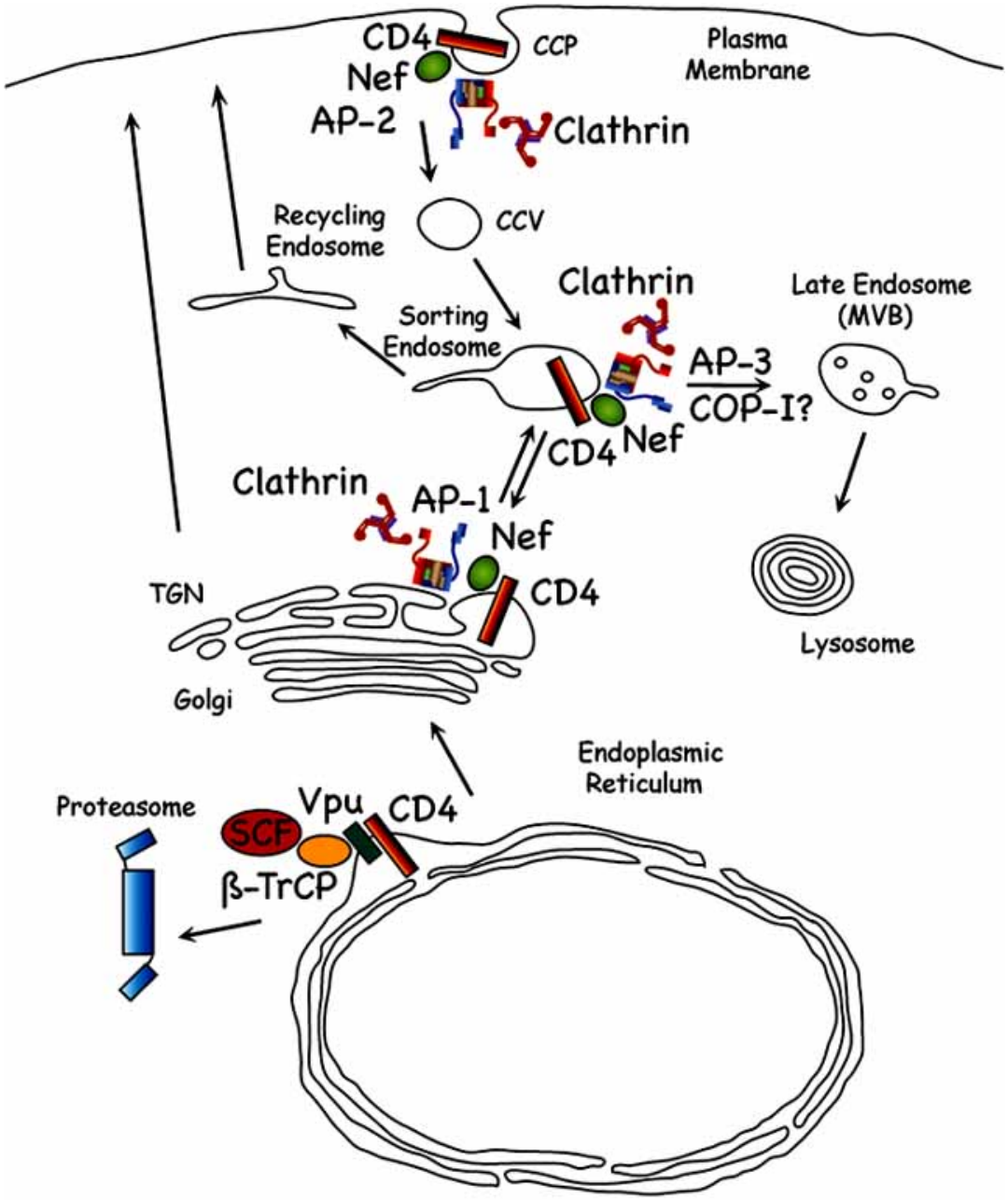

Fig. (2). A schematic representation of protein trafficking pathways involved in CD4 downregulation. Nef and Vpu act on different steps in CD4 trafficking pathways to effect downregulation. Nef links CD4 to the clathrin adaptor proteins AP1, AP2, and AP3, directing CD4 into clathrin-dependent trafficking pathways that lead to endocytosis from the plasma membrane and ultimately toward late endosomes and lysosomes where degradation of CD4 takes place. Several potential trafficking steps are indicated, including traffic between the ***trans***-Golgi network (TGN) and endosomes mediated by AP1, endocytosis mediated by AP2, and traffic to late endosomes mediated by AP3 (and also possibly by COP-I). Vpu acts at an earlier step in CD4 biosynthesis, linking CD4 that is in the endoplasmic reticulum to β-TrCP and the SCF ubiquitin ligase complex. This interaction leads to retrotranslocation of CD4 from the endoplasmic reticulum to the cytoplasm and ultimately to degradation in proteasomes.

Mouse models also indicate a correlation between the expression of Nef and the virulence of HIV-1 infection. Upon inoculation with HIV-1, mice transplanted with human thymus experienced a significant decline in CD4+ thymocytes [18,19]. Importantly, viruses that were unable to express Nef had a slower rate of replication, achieved a lower overall titer, and depleted fewer thymocytes than their wild-type counterparts [20,21]. In another mouse model system, the expression of Nef by CD4+ cells induced an AIDS-like disease, despite the absence of all other HIV-1 proteins [22-24].

A number of functions attributed to ***nef*** may explain the accessory gene's influence on viral

replication and pathogenicity. These include: (1) enhancement of virion infectivity [25-28], (2) regulation of apoptotic pathways [29-31], (3) disruption of endogenous T-cell signaling ([32-38] reviewed in [39]), (4) activation of cellular kinases [40,41], and (5) modulation of the expression of cell-surface receptors. In this latter regard, Nef has been shown to increase the surface levels of TNF [42], LIGHT [42], DC-SIGN [43,44], and the MHC-II-associated invariant chain [45,46], while decreasing the levels of CD1 [47-49], CD4, CD8 [50], CD28 [51], CD80 [52], CD86 [52], CCR5 [53], CXCR4 [54], MHC-I ([55-65] reviewed in [66]), and mature MHC-II [45,46] at the plasma membrane. Of all of these functions, the downregulation of CD4 is probably the best characterized.

2.2. Biochemical and Structural Features of Nef

Investigations into the specific functions of Nef, described above, have been facilitated by structural and biochemical studies (reviewed in [67]). Nef is expressed at high levels during the early stages of HIV-1 infection, when its multiply-spliced mRNA transcript makes up nearly three-quarters of the total viral mRNA load [68]. There is some evidence that transcription of ***nef*** may begin before provirus integration; however, the majority of Nef appears to be derived from viral DNA integrated into the host-cell chromatin [69,70].

Translation of HIV and SIV ***nef*** mRNAs produce polypeptides that range in size from 27 to 35 kDa. HIV-1 Nef proteins are generally 27 kDa and 206 to 210 amino acid residues in length (Fig. (**3**)). Regardless of species, Nef proteins are myristoylated at the N-terminus [71]. Attachment of the hydrophobic myristoyl group promotes association of Nef with cellular membranes [72-74], and is required for almost all of its functions [75,76], including the downregulation of CD4 [77]. Post-translational phosphorylation of serine and threonine residues on Nef has been reported [78-80], and has been proposed to improve the ability of Nef to downregulate CD4 [80].

The three-dimensional structure of HIV-1 Nef has largely been solved by a combination of X-ray crystallography [81-83] and nuclear magnetic resonance (NMR) spectroscopy [84,85]. These studies revealed that Nef has three major structural

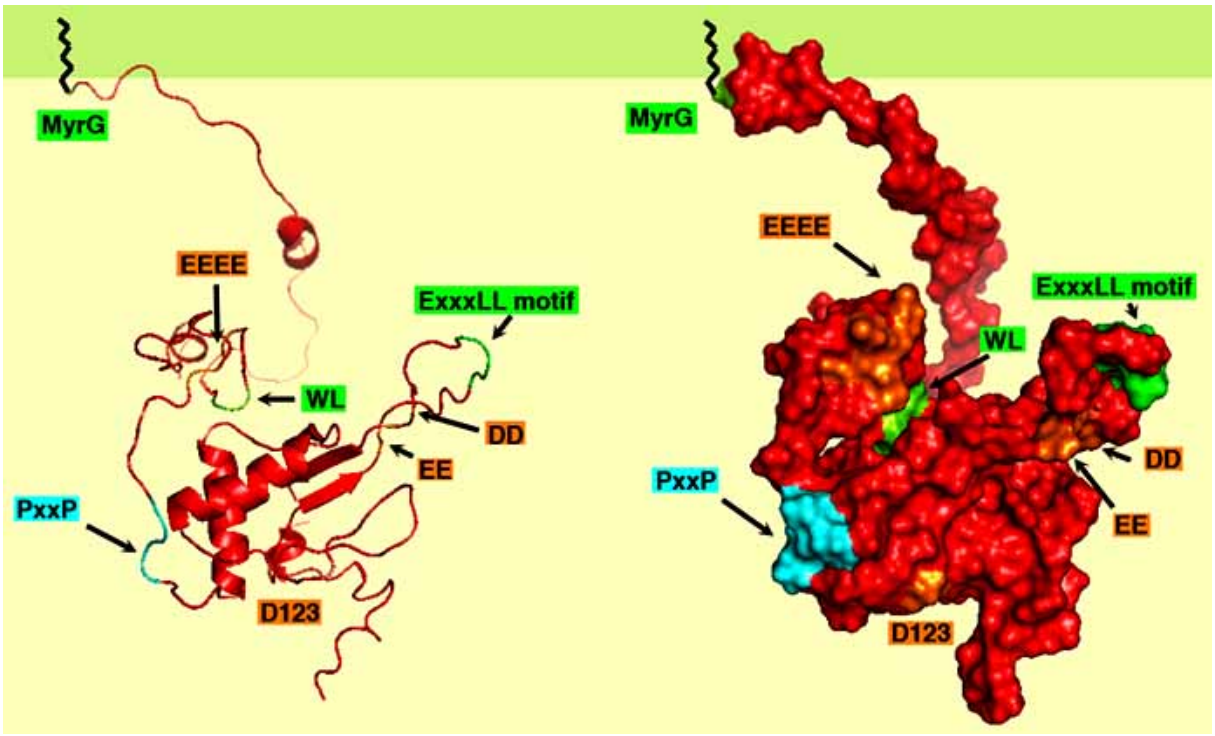

Fig. (3). Nef structural and functional motifs. A ribbon diagram (left) and surface representation (right) of HIV-1 Nef are depicted with important functional motifs highlighted. These include the N-terminal myristoylation site (MyrG); myristate is represented as a black squiggle embedded in a membrane bilayer (green band), the CD4 binding site at WL57,58 (WL), the acidic cluster at residues 62-65 (EEEE), and the central proline motif spanning residues 72-75 (PxxP), all present within the relatively unstructured N-terminal region; the well-folded core domain, including D123, implicated in oligomerization of Nef; and the C-terminal flexible loop, which contains the residues EE154,155 (EE); the ExxxLL motif (residues 160-165); and DD174,175 (DD). The ExxxLL motif is the binding site for the clathrin adaptor protein complexes AP1 and AP3. EE154,155 and DD174,175 have been implicated in binding to β-COP and V1H, respectively. Each site is color-coded for easy recognition; green for hydrophobic motifs, orange for acidic motifs, and cyan for the proline helix. These images are a composite of two structures (Protein Data Bank ID numbers 1QA5 [177] and 2NEF [85]) and were drawn using PyMOL [178].

elements: (1) a flexible N-terminal region (residues 1-80), within which are an acidic region (residues 62-65), and a type II polyproline helix (residues 69-78); (2) a well-folded C-terminal core (residues 81-147 and 181-202); and (3) an exposed, flexible loop (residues 148-180) that does not appear in the crystal structure. This loop is centered around a di-leucine motif (residues 160-165), and is bounded by negatively charged di-glutamic acid (residues 154-155) and di-aspartic acid (residues 174-175) regions (see Fig. (**3**)).

Myristoylated Nef appears to form stable homodimers and homotrimers [86,87], with the equilibrium between these two oligomers dependent on the concentration of Nef [86]. An aspartic acid (residue 123) in the C-terminal core domain, which mediates the interaction between Nef and human thioesterase II [88], has also been found to be crucial for oligomerization. Mutation of this residue prevented the formation of dimers, and abrogated many of the functions of Nef [89,90]. Oligomerization reduces the amount of solvent-exposed surface area for each Nef molecule [86]; however, for a protein of its size, Nef remains extremely accessible. Calculations indicate that the total exposed surface area of HIV-1 Nef is 17,600 $Å^2$ [91]. In comparison, the tightly-folded nuclear import protein Ran, which is also 206 residues in length, has a total accessible surface of 9,950 $Å^2$ [91]. The combination of highly exposed areas and flexible domains may account for the numerous protein interactions attributed to Nef [91].

2.3. Direct Interaction Between Nef and CD4

A physical interaction between Nef and CD4 was first demonstrated by yeast two-hybrid assays [92]. These experiments revealed that the CD4 cytosolic tail was necessary and sufficient for Nef binding. Subsequent NMR analyses narrowed the binding region to a 13-residue peptide in the CD4 cytosolic domain (residues 407-419) and a surface pocket in Nef containing a tryptophan-leucine motif (residues 57-58) [93] (Fig. (**3**)). The dissociation constant of this interaction was calculated to be in the submicromolar range [94]. The cytosolic tail of CD4 contains a di-leucine motif (residues 413-414) that is essential for Nef-mediated downregulation of CD4 [95-99]. This di-leucine pair is essential for ***in vitro*** binding of CD4 to Nef [93,94]; however, this motif may not be required for interaction in cells, as suggested by co-immunoprecipitation experiments [97] and bioluminescence resonance energy transfer (BRET) [100].

Binding between Nef and CD4 appears to be driven, in part, by myristoylation of the viral protein. While the myristoyl group is not required for a direct interaction between the two proteins [93,94], it targets Nef to membranes [101], where it is in closer proximity to CD4. This subcellular localization is supported by the presence of basic residues near the N-terminus of Nef, which serve to anchor the protein among acidic phospholipids common to cellular membranes [87]. Phosphorylation of CD4, in contrast, seems to disrupt the formation of complexes with Nef [102]. Treatment of cells with phorbol 12-myristate 13-acetate (PMA), a drug that leads to the protein kinase C (PKC)-dependent phosphorylation of CD4, partially impaired the function of Nef. Mutation of serine residues on CD4, as well as the use of PKC-inhibitors, restored the ability of Nef to downregulate CD4. Interestingly, Nef and CD4 could only be chemically cross-linked in the absence of PMA, indicating that phosphorylation of the CD4 cytosolic tail prevents association with Nef.

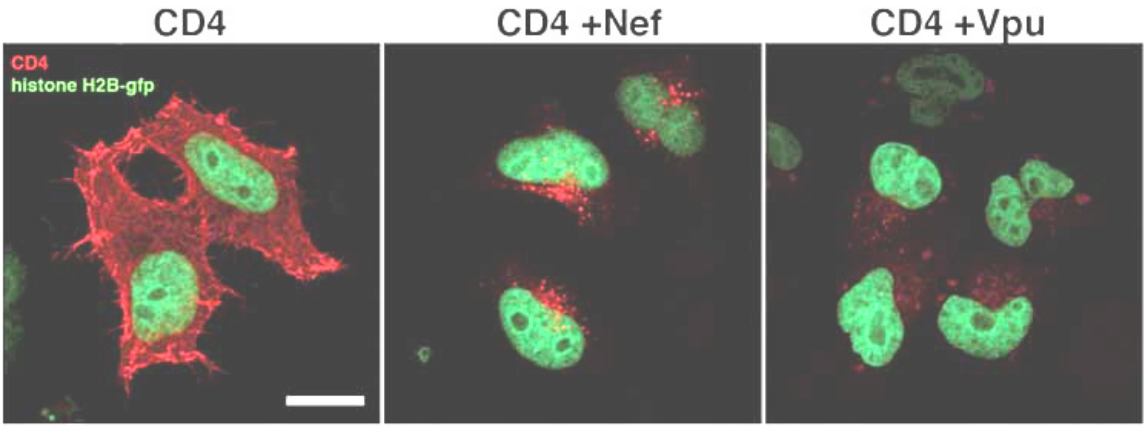

Fig. (4). CD4 downregulation by Nef and Vpu. Depicted here are confocal micrographs of HeLa cells transiently transfected with human CD4 and HIV-1 Nef or Vpu expression vectors. The fluorescent protein histone H2B-gfp marks the nuclei of transfected cells and appears green. CD4 was detected 24 hours post-transfection by indirect immunofluorescence and appears red. In the left panel are control cells that were cotransfected with CD4 and a control vector. CD4 is detected primarily on the plasma membrane. The center panel contains cells that were cotransfected with CD4 and Nef. In these cells, CD4 is localized primarily in endosomal vesicles. The right panel depicts cells that were cotransfected with CD4 and Vpu. CD4 expression is markedly reduced. A small amount of CD4 is detected in cytoplasmic bodies and vesicular compartments. Scale bar = 10 µm. These images were obtained in our laboratory by O.W.L.

2.4. Nef-Mediated Trafficking of CD4: the Role of Clathrin Adaptor Proteins

CD4-Nef interaction is thought to lead to the internalization of CD4 from the cell surface (Fig. (**2**)). In the presence of Nef, the CD4 protein is synthesized at normal levels and transported to the cell-surface with normal kinetics [103]. However, upon reaching the plasma membrane and binding to Nef [101], CD4 is recruited to clathrin coated pits (CCPs) [104] and rapidly internalized [95,103]. This results in a dramatic change in the subcellular localization of CD4, which accumulates in endosomal vesicles (Fig. (**4**)). This event requires the di-leucine motifs on both CD4 [104] and Nef [105,106], which have been shown to interact with the clathrin adaptor protein (AP) complexes [58,105-107]. AP complexes (reviewed in [108-111]) promote the formation of post-Golgi transport vesicles by linking cargo proteins to clathrin. There are four AP complexes in mammals, AP1, AP2, AP3 and AP4, the first three of which are associated with clathrin. Each of these complexes is composed of four distinct polypeptides: one small chain (σ1-4), one medium chain (μ1-4), and two large chains (β1-4 and γ, α, δ and ε, respectively). The different AP complexes confer distinct sorting properties on the vesicles that they are associated with. Thus, AP1 mediates transport between the TGN and endosomes, AP2 mediates transport from the plasma membrane to early endosomes, AP3 mediates transport from early endosomes to late endosomes and lysosomes, and AP4 mediates transport from the TGN to the basolateral membrane of polarized cells.

Nef interactions with AP1, AP2 and AP3 have been demonstrated using GST pull-down assays [105,107,112]. Additionally, a requirement for the Nef di-leucine motif in the interaction with AP1 and AP3 has been demonstrated using a yeast three-hybrid technique [113]. Several models have been proposed for the Nef mediated downregulation of CD4 based on the interaction with these various AP complexes [95,99,103,104,114]. These generally invoke the formation of a Nef-CD4-AP complex that redirects CD4 into one of several sorting pathways. Formation of a Nef-CD4-AP2 complex would promote endocytosis of CD4 from the plasma membrane, whereas formation a Nef-CD4-AP1 or -AP3 complex would affect intracellular sorting of CD4. AP1 and/or AP3 would therefore either play a role in the trafficking of CD4 after internalization from the plasma membrane, or function as an alternative pathway directing CD4 from the TGN to endosomes and lysosomes.

There is a considerable amount of evidence for the involvement of AP2 in CD4 downregulation. Expression of μ2-D176A, a dominant-negative AP2 mutant, has been shown to block the effect of Nef on CD4 [115]. Similar results were obtained with Dyn1-K44E, a dominant-negative mutant of dynamin known to inhibit AP2-dependent endocytosis at the plasma membrane [116]. Nef-GFP chimeras have also been observed to co-localize with AP2 at the periphery of the cell [117]. V1H, a regulatory subunit of the vacuolar ATPase (V-ATPase) proton pump, has been proposed to act as a bridge between Nef and AP2. Previously named Nef Binding Protein 1 (NBP1), V1H has been shown to bind to both the μ2 subunit of AP2 and the di-aspartic acid motif of the C-terminal flexible loop of Nef [118], and to facilitate the internalization of CD4 [119]. Recent findings have suggested that cargo selection and clathrin coat assembly is supported by multiple, low-affinity interactions (reviewed in [120]). Members of the "endocytic interactome" [121], such as Epsin and Eps15, stabilize the formation of vesicles by simultaneously binding clathrin, AP2, and other accessory proteins. This network of internalization factors may aid the downregulation of CD4 by Nef. When combined with RNAi against AP2, the expression of an Eps15 dominant-negative mutant profoundly inhibited the effect of Nef on CD4 [122].

2.5. Targeting of CD4 from Endosomes to Lysosomes

There has also been considerable attention paid to the mechanism by which Nef targets CD4 from endosomes to lysosomes. Treatment of Nef-expressing cells with lysosomal inhibitors stabilizes the overall level of CD4, indicating that the receptor is degraded in these acidic compartments [103]. The discovery of Nef mutants able to accelerate the internalization of CD4, but unable to degrade the receptor, suggests that endocytosis and lysosomal targeting occurs through distinct mechanisms [123]. This implies that the interaction between Nef and AP2 is not sufficient to drive CD4 to lysosomes; instead, the viral protein probably utilizes a different component of the cellular sorting machinery.

As described above, interactions with AP1 and AP3, could play a role in the lysosomal targeting of CD4 by Nef. Another candidate for this role is the coatomer protein (COP)-I complex, an important component of non-clathrin coated vesicles. The COP-I complex contains seven subunits (α, β, β', δ, γ, ε, ζ) and its association with membranes is regulated by the small GTPase Arf1. Although COP-I is known to function in the early stages of the biosynthetic pathway [124-126], there is additional evidence to suggest that it may also be involved in vesicular transport from early to late endosomes [127-130]. The β subunit of COP-I, which shares significant sequence homology with β-subunits of AP complexes [131], has been shown to physically interact with Nef by yeast two-hybrid assays and co-immunoprecipitation experiments using HIV-1-infected cells [132]. In a CHO cell line derivative, containing a temperature-sensitive mutant of the endosomal COP-I complex [133], Nef was unable to target CD4 to acidic compartments at the restrictive temperature [123]. However, the C-terminal di-glutamic acid motif (residues 154-155) of Nef,

originally identified as the binding site for β-COP, is not well conserved among HIV isolates [134]. In addition, downregulation of CD4 does not necessarily correlate with the presence of this motif [135]. ***In vitro*** experiments have shown that Arf1 interacts with the same di-glutamic acid motif on Nef, and Arf1 may act as a connector between Nef and the COP-I complex [136].

2.6. Open Questions and Future Directions

Despite all the progress made in understanding the role of Nef in CD4 downregulation, significant questions still remain. One of the most remarkable aspects of the models discussed above is the ability of Nef to mediate endocytosis and lysosomal targeting of CD4 using distinct coat components. Many of these models are predicated on an interaction, either direct or indirect, between Nef and AP2. However, binding of these two proteins has not yet been convincingly demonstrated. This may be due to a relatively weak affinity of Nef for AP2. Indeed, emerging evidence indicates that clathrin coat assembly at the plasma membrane is the result of weak interactions among components of the endocytic machinery [121]. It is also possible that a third protein is required to stabilize the binding of Nef to AP2. An early candidate for this role was CD4 itself, as the cytoplasmic tail of this cell-surface receptor had been shown to bind to both Nef [93] and AP2 [137]. However, the ability of Nef to mediate its own internalization [123], independent of CD4, argues against this possibility. V1H, a subunit of the V-ATPase proton pump, has also been proposed to connect Nef to AP2, but its contribution to the formation of this complex still needs to be assessed. Ultimately, the observation of a direct or indirect interaction between Nef and AP2, using more sensitive techniques such as BRET or surface plasmon resonance, will be required to validate the current model for CD4 downregulation.

A number of other issues, concerning the Nef-mediated downregulation of CD4, deserve additional study. Of particular interest is the role of the CD4 di-leucine motif, which is required for downregulation by Nef. It is currently unclear whether or not this motif is required for binding to Nef, having been reported as both essential [93,94] and non-essential [97]. Another unresolved issue is the relative contributions of AP1, AP3, and COP-I in the Nef-induced targeting of CD4 to endosomes and lysosomes. In particular, the binding of Nef to components of the COP-I coat will require further scrutiny in order to sort out the contribution of this interaction to CD4 downregulation. Finally, it will be of interest to determine whether Nef acts on other components of the host's lysosomal targeting machinery, including proteins involved in ubiquitin mediated sorting and the formation of multivesicular bodies. Answers to these questions should help clarify the pathway(s) used by Nef to downregulate CD4. This process should also provide additional insights into cellular protein trafficking, and may reveal critical steps susceptible to therapeutic intervention.

3. Vpu

3.1. Functions of Vpu

Despite the reduction of surface CD4 elicited by the HIV-1 and SIV Nef proteins, significant amounts of CD4 would remain early in the biosynthetic pathway without the action of additional viral proteins. As alluded to in the Introduction, the presence of CD4 in the endoplasmic reticulum (ER) of infected cells poses a significant problem for the virus. The viral attachment and fusion protein (Env) and its receptor (CD4) can interact within this compartment, leading to retention and degradation of Env-CD4 complexes [13]. Additionally, a fraction of Env-CD4 complexes are transported at a reduced rate to the plasma membrane in an inactive state with negative consequences for infectivity [9,13]. Primate immunodeficiency viruses have evolved different strategies to counteract this problem, in some cases causing the degradation of CD4 in the ER and thereby promoting infectivity. In HIV-1 and some variants of SIV[2], the protein responsible for this activity is an accessory factor encoded by the ***vpu*** (Viral Protein U) gene [138-142]. In fact, the presence of a ***vpu*** gene is a distinguishing characteristic of this group of viruses, setting them apart from the lineages that include HIV-2 and other primate immunodeficiency viruses[3] [138-140]. In the case of HIV-1, the ***vpu*** gene is expressed from the same mRNA as ***env,*** ensuring synchronous expression [143]. HIV-1 ***vpu*** sequences are well conserved in isolates from AIDS patients [144]. Premature stop codon mutations in the ***vpu*** gene have been observed in isolates from LTNPs [145], suggesting a requirement for ***vpu*** in the progression to full-blown AIDS. Both ***vpu*** and ***nef*** are required for pathogenicity in ***in vivo*** models [146] and the downregulation of CD4 is essential for viral infectivity [1,8,147]. The requirement of both ***vpu*** and ***nef*** for optimal infectivity suggests that either the site of action against CD4 (ER versus post-Golgi) of these two proteins exerts complementary effects, or that some of the non-redundant functions of ***vpu*** and ***nef*** may also play a role in infectivity.

The HIV-1 ***vpu*** gene codes for an 81 to 86-residue polypeptide, depending on the isolate, with an apparent molecular mass of 16 kDa [148]. Vpu proteins share the following features: a hydrophobic N-terminal transmembrane helix, followed by a relatively hydrophilic cytosolic C-terminal domain with one or two α-helices bordering a conserved motif

---

[2] Simian immunodefiency viruses isolated from chimpanzees, and the ***Cercopithecus*** species greater spot nosed monkeys, Mona monkeys, mustached monkeys and Dent's Mona monkeys.

[3] These include the closely related SIVsm from sooty mangabey isolates and other lineages represented by SIVagm and SIVlhoest from African green monkeys and L'Hoest's monkeys respectively, among others. In some cases virus and host exhibit evidence of cospeciation. In others there is evidence of viruses acquiring more recent hosts.

(DpSGxxpS) that binds the cellular β-transducin repeat containing protein (β−TrCP) (Fig. (**5**)). Like Nef, the Vpu gene product is a multifunctional protein. In addition to its function in downregulating CD4, Vpu is essential for the proper localization and enhancement of virus assembly in human cells [149]. However, this assembly function is not strictly required in simian cells [150], possibly explaining the lack of a ***vpu*** gene in most SIVs.

3.2. Mechanism of Vpu-induced CD4 Degradation

Vpu-induced CD4 degradation occurs early in the secretory pathway (Fig. (**2**)) and can also be demonstrated ***in vitro*** in ER-derived microsomes [142,151]. In the presence of Vpu, CD4 expression is strongly reduced, although small amounts of CD4 are present in cytoplasmic bodies and vesicular compartments (Fig. (**4**)). This process requires a functioning proteasomal pathway and the presence of lysine residues on the cytosolic tail of CD4, suggesting that CD4 is itself ubiquitinated on one or more of its four cytosolic lysine residues during the degradative process [152,153]. This process resembles the ER-associated degradation (ERAD) pathway, although aspects of the mechanism may be peculiar to the Vpu system. ERAD is a quality control mechanism that is conserved from yeast to man and helps clear from the ER misfolded proteins as well as unassembled subunits of membrane protein complexes (recently reviewed in [154]). Misfolding is detected by ER resident or cytosolic chaperones. ERAD substrates are dislocated from the ER to the cytoplasm and tagged with ubiquitin by ERAD-dedicated ubiquitin ligases, after which they are degraded by the 26S proteasome. There appear to be multiple ERAD pathways, depending on whether the misfolded domain of the target protein resides in the ER lumen, in the cytoplasm or in a membrane-spanning domain. However, downstream events, including recognition of the ubiquitinated protein and proteasomal degradation, seem to occur in the same fashion for most substrates and are dependent on the same set of genes [155].

A recent study in which HIV-1 Vpu-mediated CD4 degradation was reconstituted in budding yeast revealed important differences between this process and the standard ERAD pathway since the former did not depend on ubiquitin ligases that are genetically linked to ERAD [153]. Indeed, CD4 was properly translocated into the ER in yeast, yet exhibited poor stability in yeast strains with a fully functioning ERAD system. In the absence of Vpu, ubiquitination occured on lysine residues in the CD4 ***extracellular*** domain after dislocation from the ER as is typical for an ERAD substrate. In contrast, yeast strains defective in ERAD-dedicated ubiquitination

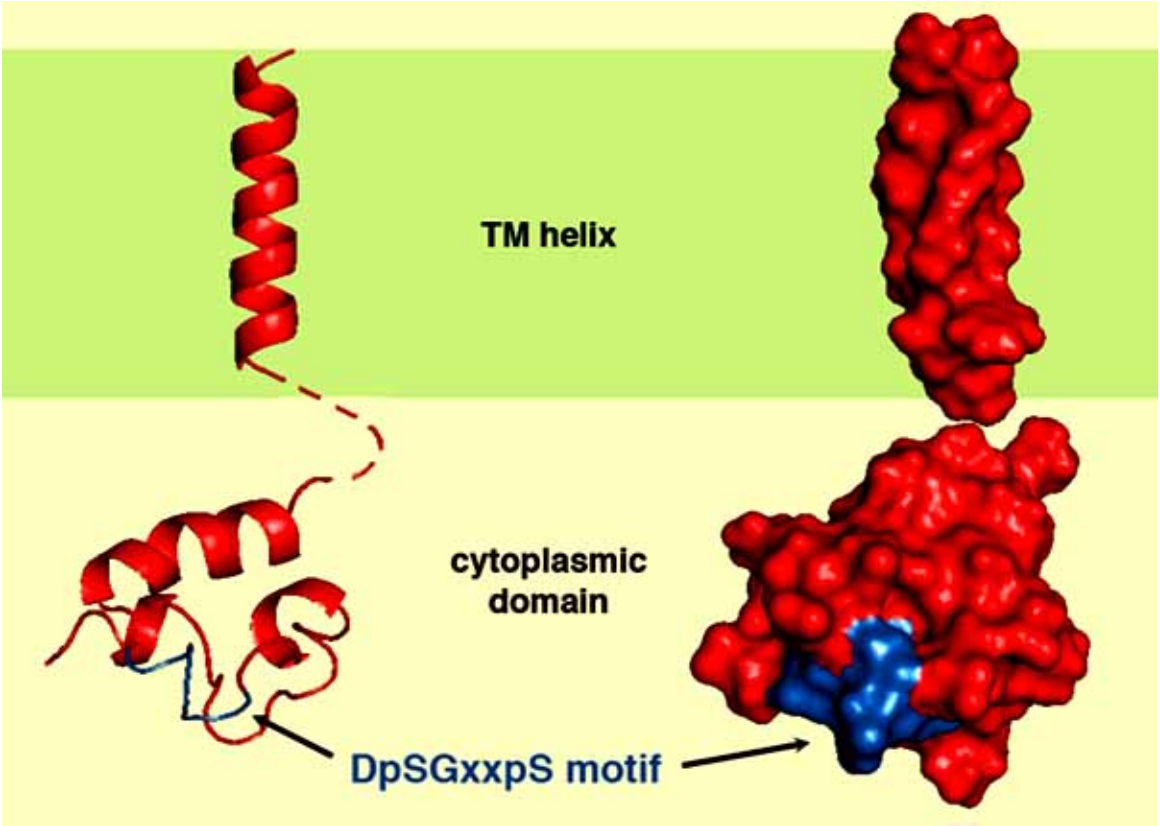

Fig. (5). Vpu structural features. A ribbon diagram (left) and surface representation (right) of HIV-1 Vpu are shown. The transmembrane (TM) helix and cytoplasmic domain are indicated, as well as the position of the DpSGxxpS β-TrCP binding motif. The membrane bilayer is represented by a green band. These images are a composite of two structures (Protein Data Bank ID numbers 1PI7 [179] and 1VPU [180]) and were drawn using PyMOL [178].

ligases were not able to efficiently degrade CD4. However, in these ERAD-defective yeast strains, expression of Vpu and the human protein β-TrCP (discussed in more detail below) restored the rapid degradation of CD4. Remarkably, this degradation was now dependent on the presence of lysine residues in the ***cytosolic*** tail of CD4, which became ubiquitinated by the SCF E3 ubiquitin ligase complex prior to dislocation. The SCF complex is not normally involved in the ERAD pathway in yeast. This parallels the situation in human cells, described in the following section.

3.3. Formation of a CD4-Vpu-β-TrCP-SCF Complex

As mentioned above, the link between Vpu and ubiquitination of CD4 appears to be β-TrCP, a host cell factor that binds to the SCF E3 ubiquitin ligase. Vpu binds to the cytosolic tail of CD4 [156] in a manner that requires the cytosolic α-helices of Vpu [157]. In the presence of both CD4 and Vpu, β-TrCP is recruited to membranes [158], strongly suggesting a model in which a ternary complex of CD4, Vpu and β-TrCP on the ER membrane mediates docking of the SCF complex in a position where it can transfer ubiquitin to the cytosolic tail of CD4, facilitating its destruction. This process is inhibited by overexpression of an F-box-deleted β-TrCP mutant that is incapable of binding SCF, lending further weight to this model [158].

A number of cellular substrates for β-TrCP–mediated ubiquitination by SCF have been described, including the transcription factors β-catenin, ATF4, NFκB p105, and the kinase IκB-α [159-161], none of which are membrane proteins. For these cellular substrates, ubiquitination leads to either proteolytic processing (in the case of NFκB p105) or complete degradation by the 26S proteasome (in all other cases). Perhaps uniquely, Vpu docking to β-TrCP leads not to ubiquitination and degradation of Vpu itself but of CD4 instead. Presumably, in the ternary complex of CD4, Vpu and β-TrCP, the cytosolic lysine residues of CD4 are accessible to SCF in a similar fashion as its other substrates, albeit in ***trans***. It is worth noting that the β-TrCP binding site and the ubiquitination sites can be present in widely separated domains of substrate proteins ([162] and references therein).

Overexpression of Vpu has been shown to interfere with the regulation of these cellular substrates in a number of systems, presumably ***via*** competitive inhibition with the binding site on β-TrCP. For example, overexpression of Vpu inhibits degradation of IκB-α in response to the presence of TNFα [163]. In consequence, the NFκB pathway is suppressed, sensitizing cells to Fas-mediated apoptosis [164].

3.4. Binding of Vpu to β-TrCP

HIV-1 Vpu binds to β-TrCP in a manner that requires phosphorylation of serine residues 52 and 56 on Vpu [165]. This modification is constitutive and is likely to be catalyzed by one or more casein kinase II isoforms [166]. These residues are found in the context of a DpSGxxpS motif (Fig. (**5**)) (pS represents the two phosphoserines and x represents any amino acid) and bind to the WD repeat domain of β-TrCP. β-TrCP in turn binds to the SCF complex ***via*** its F-box domain [158]. Insertion of helix-breaking proline residues into either of the two putative cytosolic α-helices also abrogates the effect of Vpu on CD4 [157]. The DpSGxxpS motif is shared by endogenous targets of β-TrCP such as IκB-α and β-catenin. Other targets have very similar motifs such as DpSGxxxpS (ATF4) or DpTGxxpTpS (NF-κB p105).

In the case of β-catenin and HIV-1 Vpu, for which detailed structural information is available [162,167-169], the two phosphates make specific contacts in the WD-repeat β-propeller domain of β-TrCP. The first phosphoserine residue (S52 of HIV-1 Vpu) of the motifs of both β-catenin and HIV-1 Vpu is oriented in the same manner and makes the same contacts with β-TrCP residues, making electrostatic and hydrogen bonds with a pocket formed by Y271, R285, S309 and S325 of β-TrCP [162,167,169]. The small size of the central glycine residue in the DpSGxxpS motif is probably important to prevent steric hindrance with bulky residues L331 and L351 of β-TrCP that abut the binding site of the N-terminal phosphoserine residue.

The second phosphoserine residue is oriented differently in these two proteins and makes different contacts with β-TrCP. In the case of β-catenin, the peptide motif is extended and makes contacts with a basic patch centered on R431 [162,169]. The Vpu peptide forms a bend at the conserved glycine residue and makes contacts with a basic patch centered on K365. Flanking residues of HIV-1 Vpu in the two α-helices surrounding the DpSGxxpS motif (residues 51 - 56 are DSGNES in the Vpu sequence from the HIV-1 strain HXB2) also make extensive contacts with β-TrCP. The peptide LIERAEDSG (residues 45 – 53 of HXB2 Vpu) binds to β-TrCP [168]. Other acidic residues on Vpu near the second phosphoserine residue strengthen binding to this basic patch by making additional electrostatic interactions. In addition, hydrophobic residues upstream of the DSG motif of Vpu make van der Waals contacts with V270, Y271 and F523 [167,168]. However, ***both*** phosphoserines in the DpSGxxpS motif are required for CD4 downregulation by HIV-1 Vpu and neither can be replaced with an acidic residue [170]. Currently, it is not well understood why there is a discrepancy between the ***in vitro*** binding studies and the ***in vivo*** function of Vpu.

3.5. Variability of the β-TrCP-Binding Motif

To summarize, Vpu proteins take advantage of a host cell β-TrCP binding motif in order to recruit the SCF E3 ubiquitin ligase to the cytosolic tail of CD4,

leading to ubiquitination of CD4 and its degradation ***via*** an ERAD-related pathway. There appear to be several possible modes of binding of this motif to the WD repeat domain of β-TrCP; however, the relative invariance of the N-terminal half of this motif (roughly DpSG) and the similarity of contacts made with this sequence in the context of the Vpu and β-catenin peptides suggest that this is a common element in β-TrCP ligands. Similarly, the near absolute conservation of the DSG sequence between widely divergent HIV-1 and SIV clades (with the exception of SIVcpzANT, mentioned above) is consistent with this hypothesis. On the other hand, there appear to be multiple modes of binding of the C-terminal half of the motif, even among very similar sequences. It is interesting to note that HIV-1 Vpu cannot tolerate mutation of its phosphorylatable serine residues to acidic residues, whereas numerous isolates obtained from chimpanzees (SIVcpz strains) and Greater Spot-Nosed Monkeys (SIVgsn) for which Vpu-mediated CD4 downregulation has been assayed contain several acidic residues in place of serine or threonine residues and even tolerate an Ala in place of the bend-forming Gly (for example, the sequence in SIVcpzANT is DSAIEED) [171]. It may be that sequences outside of the DpSGxx(phospho- or acidic) core motif determine the mode of binding and its plasticity.

All of the above suggests that recognition of substrates by β-TrCP is mediated by an invariant DpS/T (positions 1 and 2) motif. The presence of a glycine in position 3 both prevents steric hindrance and allows the potential for either a bend or extended orientation for binding of a downstream acidic moiety (pS, pT, D or E) in position 6 or 7 to one of at least two potential binding pockets. It is tempting to conjecture that the specific requirement for pS in the downstream position of the HIV-1 Vpu motif reflects a dependence for a specific mode of binding to β-TrCP, or that additional residues outside of the core motif contribute to binding.

3.6. Open Questions and Future Directions

Several puzzling features of the Vpu system remain to be answered. For example, among the known ligands of β-TrCP, the lentiviral Vpu proteins appear to be unique in that they do not mediate their own ubiquitination by the SCF complex even though all known clades contain at least one lysine residue in the cytosolic domain [172]. It is possible that the sequence context of the DpSGxx(phospho- or acidic) motif dictates the orientation of Vpu on the WD repeat domain in such a way that the Vpu lysine residues are inaccessible or that the CD4 tail is presented in a particularly favorable orientation. The sequence of the C-terminal half of the binding motif, as well as downstream residues, may be a potential predictor of binding site usage and/or outcome (whether the target protein is processed, degraded or acts as an adaptor). To investigate this possibility, it may be useful to determine the binding site for the SIVcpzANT peptide (DSAIEED and flanking residues) to see whether it binds to β-TrCP in a similar fashion to HIV-1 Vpu or whether it binds in an extended fashion similar to β-catenin.

A simpler explanation for alternative outcomes of β-TrCP binding may be related to the position of the ubiquitination sites within the target proteins. For example, the small size of the Vpu cytosolic domain may prevent its ubiquitination by the SCF complex, leading to CD4 ubiquitination by default. The apparently unique case of NFκB p105, which is cleaved at a single site rather than degraded, might also be explained by unknown regulatory elements independent of the β-TrCP binding motif.

An exciting possibility is that binding of the Vpu β-TrCP binding motif is distinct from that of the cellular substrate proteins. This would raise the possibility of finding a small molecule to occlude the Vpu-specific basic patch around K365 of β-TrCP. Such an inhibitor would have the potential to blockade CD4 degradation and also to have limited side effects. Clearly much more structural information will be required in order to know whether such an approach would be feasible.

No other known substrates of the SCF complex are targeted to the ERAD-like pathway seen in the Vpu-CD4 system. It may be worth mining the databases for host cell membrane proteins with DpSGxx(phospho- or acidic) motifs within their cytosolic domains that may themselves be targeted for degradation and/or processing or that may act as adaptors in a similar fashion to Vpu. Likewise, this mode of ERAD has not been observed for other membrane proteins and may require features that are unique to or shared with the Vpu-CD4 system, such as the SCF complex. It would be interesting to test whether the DpSGxxpS motif within Vpu can be functionally replaced by other motifs capable of recruiting non-SCF ubiquitin ligases (an example would be the zinc finger motif of the HIV-1 protein Vif that binds to the Cul5 ubiquitin ligase) to determine whether targeting to the ERAD-like pathway is specific to SCF. In addition, it remains an open question whether CD4 ERAD shares features with that of membrane proteins such as Ste6p* and the human protein F508del-CFTR, including the requirement for cytosolic chaperones.

A large amount of sequence data for ***vpu*** genes has been obtained from patient studies, but such studies are necessarily constrained by the degree in which they can be manipulated, and hence the amount of information that can be found regarding the ***in vivo*** role(s) of Vpu is limited. A useful ***in vivo*** system has been developed that takes advantage of chimeric SIV/HIV viruses, known as SHIV, in infected monkeys. The SHIV model has been used to assess the immunological impact of infection and the potential efficacy of vaccines. The SHIV model system has also proven useful in studying the role of Vpu ***in vivo***. In one series of experiments, a ***vpu***-deleted SHIV was observed to be non-pathogenic

despite increased production of Env [173]. In a similar study, the ***vpu***-deleted SHIV strain gained compensatory mutations in ***nef*** and ***env***, although whether the mutated ***nef*** and/or ***env*** genes obtain novel functions as in the case of HIV-2 Env (see above) is unknown [174]. These two studies used the same starting virus (SHIV(KU-1bMC33)), each in infected pig-tailed macaques. Clearly there is some variability in outcomes. In another SHIV study, a non-phosphorylatable Vpu mutant was observed to revert to wild-type at high frequency, underscoring the importance of the phosphoserine residues of Vpu in infection and pathogenesis [175]. These studies highlight the utility of developing ***in vivo*** systems to both confirm molecular information obtained ***in vitro*** and to advance our understanding of Vpu function.

At present it is unclear whether HIV-2 or related SIV strains, that do not have a ***vpu*** gene, contain a Vpu-like CD4 degradative capability as well apart from the well-characterized Nef proteins of these viruses. This raises interesting questions regarding the need for Vpu in viral clades that have it, and whether the presence of the ***vpu*** gene correlates with the observed virulence and pathogenicity of different primate immunodeficiency viruses. For example, it is well known that HIV-2 is generally less virulent than HIV-1. SIVs are generally thought to be endemic and of low pathogenicity among primate populations; however, the catalog of primate immunodeficiency viruses continues to increase and few of these have been characterized [1]. The role of Vpu in these viruses is largely unknown.

3. CONCLUDING REMARKS

The study of Nef and Vpu has yielded numerous insights into lentiviral replication and pathogenesis and has also provided additional information on cellular protein trafficking and quality control pathways. The identification of peptide motifs on Nef and Vpu, and also of the cellular binding partners of these viral proteins, have been important steps in the delineation of these pathways. Continued study of these viral proteins should yield new information on both lentiviral and cellular biology. Mutations in both ***nef*** and ***vpu*** have been associated with decreased pathogenicity of HIV-1 in human patients. These genetic data as well as the impaired ***in vitro*** replication of ***nef***- and ***vpu***-deleted viruses, highlight the importance of these accesasory genes for HIV biology and suggest that they may be potential drug targets [176]. Given the current level of structural and functional information on Nef and Vpu, it is not unreasonable to propose the development of small molecule inhibitors of these proteins as a supplementary means of antiviral therapy.

ACKNOWLEDGEMENTS

Work in the authors' laboratory was supported by the Intramural Program of NICHD and the NIH Intramural AIDS Targeted Antiviral Program. The work of R. Chaudhuri was supported by the NIH-Cambridge and Gates-Cambridge Graduate Scholarships. We thank W.J. Smith for help with (Figs. (**3**) and (**5**)), and K. Janvier for comments on the manuscript.

REFERENCES

[1] Gordon, S., Pandrea, I., Dunham, R., Apetrei, C. and Silvestri, G. (2005) ***HIV Sequence Compendium 2005***, Theoretical Biology and Biophysics Group, Los Alamos National Laboratory, Los Alamos, NM.

[2] Bowers, K., Pitcher, C. and Marsh, M. (1997) ***Int. J. Biochem. Cell Biol.,*** **29**, 871-875.

[3] Bijlmakers, M. J. and Marsh, M. (1999) ***J. Cell Biol.,*** **145**, 457-468.

[4] Pauza, C. D., Galindo, J. E. and Richman, D. D. (1990) ***J. Exp. Med.,*** **172**, 1035-1042.

[5] Robinson, H. L. and Zinkus, D. M. (1990) ***J. Virol.,*** **64**, 4836-4841.

[6] Lama, J. (2003) ***Curr. HIV Res.,*** **1**, 167-184.

[7] Levesque, K., Finzi, A., Binette, J. and Cohen, E. A. (2004) ***Curr. HIV Res.,*** **2**, 51-59.

[8] Lama, J., Mangasarian, A. and Trono, D. (1999) ***Curr. Biol.,*** **9**, 622-631.

[9] Levesque, K., Zhao, Y. S. and Cohen, E. A. (2003) ***J. Biol. Chem.,*** **278**, 28346-28353.

[10] Crise, B., Buonocore, L. and Rose, J. K. (1990) ***J. Virol.,*** **64**, 5585-5593.

[11] Jabbar, M. A. and Nayak, D. P. (1990) ***J. Virol.,*** **64**, 6297-6304.

[12] Stevenson, M., Meier, C., Mann, A. M., Chapman, N. and Wasiak, A. (1988) ***Cell,*** **53**, 483-496.

[13] Willey, R. L., Maldarelli, F., Martin, M. A. and Strebel, K. (1992) ***J. Virol.,*** **66**, 226-234.

[14] Deacon, N. J., Tsykin, A., Solomon, A., Smith, K., Ludford-Menting, M., Hooker, D. J., McPhee, D. A., Greenway, A. L., Ellett, A., Chatfield, C., Lawson, V. A., Crowe, S., Maerz, A., Sonza, S., Learmont, J., Sullivan, J. S., Cunningham, A., Dwyer, D., Dowton, D. and Mills, J. (1995) ***Science,*** **270**, 988-991.

[15] Learmont, J. C., Geczy, A. F., Mills, J., Ashton, L. J., Raynes-Greenow, C. H., Garsia, R. J., Dyer, W. B., McIntyre, L., Oelrichs, R. B., Rhodes, D. I., Deacon, N. J. and Sullivan, J. S. (1999) ***N. Engl. J. Med.,*** **340**, 1715-1722.

[16] Oelrichs, R., Tsykin, A., Rhodes, D., Solomon, A., Ellett, A., McPhee, D. and Deacon, N. (1998) ***AIDS Res. Hum. Retroviruses,*** **14**, 811-814.

[17] Kestler, H. W., 3rd, Ringler, D. J., Mori, K., Panicali, D. L., Sehgal, P. K., Daniel, M. D. and Desrosiers, R. C. (1991) ***Cell,*** **65**, 651-662.

[18] Aldrovandi, G. M., Feuer, G., Gao, L., Jamieson, B., Kristeva, M., Chen, I. S. and Zack, J. A. (1993) ***Nature,*** **363**, 732-736.

[19] Bonyhadi, M. L., Rabin, L., Salimi, S., Brown, D. A., Kosek, J., McCune, J. M. and Kaneshima, H. (1993) ***Nature,*** **363**, 728-732.

[20] Arora, V. K., Fredericksen, B. L. and Garcia, J. V. (2002) ***Microbes Infect.,*** **4**, 189-199.

[21] Jamieson, B. D., Aldrovandi, G. M., Planelles, V., Jowett, J. B., Gao, L., Bloch, L. M., Chen, I. S. and Zack, J. A. (1994) ***J. Virol.,*** **68**, 3478-3485.

[22] Hanna, Z., Kay, D. G., Rebai, N., Guimond, A., Jothy, S. and Jolicoeur, P. (1998) ***Cell,*** **95**, 163-175.

[23] Lindemann, D., Wilhelm, R., Renard, P., Althage, A., Zinkernagel, R. and Mous, J. (1994) ***J. Exp. Med.,*** **179**, 797-807.

[24] Skowronski, J., Parks, D. and Mariani, R. (1993) ***EMBO J.,*** **12**, 703-713.

[25] Chowers, M. Y., Pandori, M. W., Spina, C. A., Richman, D. D. and Guatelli, J. C. (1995) ***Virology,*** **212**, 451-457.

[26] Chowers, M. Y., Spina, C. A., Kwoh, T. J., Fitch, N. J., Richman, D. D. and Guatelli, J. C. (1994) ***J. Virol.,*** **68**, 2906-2914.

[27] Miller, M. D., Warmerdam, M. T., Gaston, I., Greene, W. C. and Feinberg, M. B. (1994) ***J. Exp. Med.,*** **179**, 101-113.

[28] Miller, M. D., Warmerdam, M. T., Page, K. A., Feinberg, M. B. and Greene, W. C. (1995) ***J. Virol.,*** **69**, 579-584.

[29] Acheampong, E. A., Parveen, Z., Muthoga, L. W., Kalayeh, M., Mukhtar, M. and Pomerantz, R. J. (2005) ***J. Virol.,* 79**, 4257-4269.

[30] Huang, M. B., Jin, L. L., James, C. O., Khan, M., Powell, M. D. and Bond, V. C. (2004) ***J. Virol.,* 78**, 11084-11096.

[31] Lee, S. B., Park, J., Jung, J. U. and Chung, J. (2005) ***J. Cell Sci.,* 118**, 1851-1859.

[32] Ahmad, N. and Venkatesan, S. (1988) ***Science,* 241**, 1481-1485.

[33] Baur, A. S., Sawai, E. T., Dazin, P., Fantl, W. J., Cheng-Mayer, C. and Peterlin, B. M. (1994) ***Immunity,* 1**, 373-384.

[34] De, S. K. and Marsh, J. W. (1994) ***J. Biol. Chem.,* 269**, 6656-6660.

[35] Graziani, A., Galimi, F., Medico, E., Cottone, E., Gramaglia, D., Boccaccio, C. and Comoglio, P. M. (1996) ***J. Biol. Chem.,* 271**, 6590-6593.

[36] Greenway, A., Azad, A. and McPhee, D. (1995) ***J. Virol.,* 69**, 1842-1850.

[37] Iafrate, A. J., Bronson, S. and Skowronski, J. (1997) ***EMBO J.,* 16**, 673-684.

[38] Schrager, J. A. and Marsh, J. W. (1999) ***Proc. Natl. Acad. Sci. USA,* 96**, 8167-8172.

[39] Tolstrup, M., Ostergaard, L., Laursen, A. L., Pedersen, S. F. and Duch, M. (2004) ***Curr. HIV Res.,* 2**, 141-151.

[40] Renkema, G. H., Manninen, A. and Saksela, K. (2001) ***J. Virol.,* 75**, 2154-2160.

[41] Yang, P. and Henderson, A. J. (2005) ***Virology,* 336**, 219-228.

[42] Lama, J. and Ware, C. F. (2000) ***J. Virol.,* 74**, 9396-9402.

[43] Coleman, S. H., Madrid, R., Van Damme, N., Mitchell, R. S., Bouchet, J., Servant, C., Pillai, S., Benichou, S. and Guatelli, J. C. (2006) ***J. Virol.,* 80**, 1837-1849.

[44] Sol-Foulon, N., Moris, A., Nobile, C., Boccaccio, C., Engering, A., Abastado, J. P., Heard, J. M., van Kooyk, Y. and Schwartz, O. (2002) ***Immunity,* 16**, 145-155.

[45] Schindler, M., Wurfl, S., Benaroch, P., Greenough, T. C., Daniels, R., Easterbrook, P., Brenner, M., Munch, J. and Kirchhoff, F. (2003) ***J. Virol.,* 77**, 10548-10556.

[46] Stumptner-Cuvelette, P., Morchoisne, S., Dugast, M., Le Gall, S., Raposo, G., Schwartz, O. and Benaroch, P. (2001) ***Proc. Natl. Acad. Sci. USA,* 98**, 12144-12149.

[47] Chen, N., McCarthy, C., Drakesmith, H., Li, D., Cerundolo, V., McMichael, A. J., Screaton, G. R. and Xu, X. N. (2006) ***Eur. J. Immunol.,* 36**, 278-286.

[48] Cho, S., Knox, K. S., Kohli, L. M., He, J. J., Exley, M. A., Wilson, S. B. and Brutkiewicz, R. R. (2005) ***Virology,* 337**, 242-252.

[49] Shinya, E., Owaki, A., Shimizu, M., Takeuchi, J., Kawashima, T., Hidaka, C., Satomi, M., Watari, E., Sugita, M. and Takahashi, H. (2004) ***Virology,* 326**, 79-89.

[50] Stove, V., Van de Walle, I., Naessens, E., Coene, E., Stove, C., Plum, J. and Verhasselt, B. (2005) ***J. Virol.,* 79**, 11422-11433.

[51] Swigut, T., Shohdy, N. and Skowronski, J. (2001) ***EMBO J.,* 20**, 1593-1604.

[52] Chaudhry, A., Das, S. R., Hussain, A., Mayor, S., George, A., Bal, V., Jameel, S. and Rath, S. (2005) ***J. Immunol.,* 175**, 4566-4574.

[53] Michel, N., Allespach, I., Venzke, S., Fackler, O. T. and Keppler, O. T. (2005) ***Curr. Biol.,* 15**, 714-723.

[54] Hrecka, K., Swigut, T., Schindler, M., Kirchhoff, F. and Skowronski, J. (2005) ***J. Virol.,* 79**, 10650-10659.

[55] Fleis, R., Filzen, T. and Collins, K. L. (2002) ***Virology,* 303**, 120-129.

[56] Greenberg, M. E., Iafrate, A. J. and Skowronski, J. (1998) ***EMBO J.,* 17**, 2777-2789.

[57] Kasper, M. R., Roeth, J. F., Williams, M., Filzen, T. M., Fleis, R. I. and Collins, K. L. (2005) ***J. Biol. Chem.,* 280**, 12840-12848.

[58] Le Gall, S., Erdtmann, L., Benichou, S., Berlioz-Torrent, C., Liu, L., Benarous, R., Heard, J. M. and Schwartz, O. (1998) ***Immunity,* 8**, 483-495.

[59] Le Gall, S., Heard, J. M. and Schwartz, O. (1997) ***Res. Virol.,* 148**, 43-47.

[60] Mangasarian, A., Piguet, V., Wang, J. K., Chen, Y. L. and Trono, D. (1999) ***J. Virol.,* 73**, 1964-1973.

[61] Piguet, V., Wan, L., Borel, C., Mangasarian, A., Demaurex, N., Thomas, G. and Trono, D. (2000) ***Nat. Cell Biol.,* 2**, 163-167.

[62] Roeth, J. F., Williams, M., Kasper, M. R., Filzen, T. M. and Collins, K. L. (2004) ***J. Cell Biol.,* 167**, 903-913.

[63] Schwartz, O., Marechal, V., Le Gall, S., Lemonnier, F. and Heard, J. M. (1996) ***Nat. Med.,* 2**, 338-342.

[64] Swann, S. A., Williams, M., Story, C. M., Bobbitt, K. R., Fleis, R. and Collins, K. L. (2001) ***Virology,* 282**, 267-277.

[65] Williams, M., Roeth, J. F., Kasper, M. R., Filzen, T. M. and Collins, K. L. (2005) ***J. Virol.,* 79**, 632-636.

[66] Roeth, J. F. and Collins, K. L. (2006) ***Microbiol. Mol. Biol. Rev.,* 70**, 548-563.

[67] Geyer, M., Fackler, O. T. and Peterlin, B. M. (2001) ***EMBO Rep.,* 2**, 580-585.

[68] Klotman, M. E., Kim, S., Buchbinder, A., DeRossi, A., Baltimore, D. and Wong-Staal, F. (1991) ***Proc. Natl. Acad. Sci. USA,* 88**, 5011-5015.

[69] Wu, Y. and Marsh, J. W. (2001) ***Science,* 293**, 1503-1506.

[70] Wu, Y. and Marsh, J. W. (2003) ***J. Virol.,* 77**, 10376-10382.

[71] Allan, J. S., Coligan, J. E., Lee, T. H., McLane, M. F., Kanki, P. J., Groopman, J. E. and Essex, M. (1985) ***Science,* 230**, 810-813.

[72] Bentham, M., Mazaleyrat, S. and Harris, M. (2006) ***J. Gen. Virol.,* 87**, 563-571.

[73] Franchini, G., Robert-Guroff, M., Ghrayeb, J., Chang, N. T. and Wong-Staal, F. (1986) ***Virology,* 155**, 593-599.

[74] Yu, G. and Felsted, R. L. (1992) ***Virology,* 187**, 46-55.

[75] Aldrovandi, G. M., Gao, L., Bristol, G. and Zack, J. A. (1998) ***J. Virol.,* 72**, 7032-7039.

[76] Hanna, Z., Priceputu, E., Kay, D. G., Poudrier, J., Chrobak, P. and Jolicoeur, P. (2004) ***Virology,* 327**, 273-286.

[77] Mariani, R. and Skowronski, J. (1993) ***Proc. Natl. Acad. Sci. USA,* 90**, 5549-5553.

[78] Coates, K., Cooke, S. J., Mann, D. A. and Harris, M. P. (1997) ***J. Biol. Chem.,* 272**, 12289-12294.

[79] Guy, B., Kieny, M. P., Riviere, Y., Le Peuch, C., Dott, K., Girard, M., Montagnier, L. and Lecocq, J. P. (1987) ***Nature,* 330**, 266-269.

[80] Luo, T., Downing, J. R. and Garcia, J. V. (1997) ***J. Virol.,* 71**, 2535-2539.

[81] Arold, S., Franken, P., Strub, M. P., Hoh, F., Benichou, S., Benarous, R. and Dumas, C. (1997) ***Structure,* 5**, 1361-1372.

[82] Franken, P., Arold, S., Padilla, A., Bodeus, M., Hoh, F., Strub, M. P., Boyer, M., Jullien, M., Benarous, R. and Dumas, C. (1997) ***Protein Sci.,* 6**, 2681-2683.

[83] Lee, C. H., Saksela, K., Mirza, U. A., Chait, B. T. and Kuriyan, J. (1996) ***Cell,* 85**, 931-942.

[84] Grzesiek, S., Bax, A., Clore, G. M., Gronenborn, A. M., Hu, J. S., Kaufman, J., Palmer, I., Stahl, S. J. and Wingfield, P. T. (1996) ***Nat. Struct. Biol.,* 3**, 340-345.

[85] Grzesiek, S., Bax, A., Hu, J. S., Kaufman, J., Palmer, I., Stahl, S. J., Tjandra, N. and Wingfield, P. T. (1997) ***Protein Sci.,* 6**, 1248-1263.

[86] Arold, S., Hoh, F., Domergue, S., Birck, C., Delsuc, M. A., Jullien, M. and Dumas, C. (2000) ***Protein Sci.,* 9**, 1137-1148.

[87] Dennis, C. A., Baron, A., Grossmann, J. G., Mazaleyrat, S., Harris, M. and Jaeger, J. (2005) ***Proteins,* 60**, 658-669.

[88] Liu, L. X., Margottin, F., Le Gall, S., Schwartz, O., Selig, L., Benarous, R. and Benichou, S. (1997) ***J. Biol. Chem.,* 272**, 13779-13785.

[89] Liu, L. X., Heveker, N., Fackler, O. T., Arold, S., Le Gall, S., Janvier, K., Peterlin, B. M., Dumas, C., Schwartz, O., Benichou, S. and Benarous, R. (2000) ***J. Virol.,* 74**, 5310-5319.

[90] Cohen, G. B., Rangan, V. S., Chen, B. K., Smith, S. and Baltimore, D. (2000) ***J. Biol. Chem.,* 275**, 23097-23105.

[91] Geyer, M. and Peterlin, B. M. (2001) ***FEBS Lett.,* 496**, 91-95.

[92] Rossi, F., Gallina, A. and Milanesi, G. (1996) ***Virology,* 217**, 397-403.

[93] Grzesiek, S., Stahl, S. J., Wingfield, P. T. and Bax, A. (1996) ***Biochemistry,* 35**, 10256-10261.

[94] Preusser, A., Briese, L., Baur, A. S. and Willbold, D. (2001) ***J. Virol.,* 75**, 3960-3964.

[95] Aiken, C., Konner, J., Landau, N. R., Lenburg, M. E. and Trono, D. (1994) ***Cell,* 76**, 853-864.

[96] Anderson, S. J., Lenburg, M., Landau, N. R. and Garcia, J. V. (1994) ***J. Virol.,* 68**, 3092-3101.

[97] Bentham, M., Mazaleyrat, S. and Harris, M. (2003) ***J. Gen. Virol.,* 84**, 2705-2713.

[98] Hua, J., Blair, W., Truant, R. and Cullen, B. R. (1997) ***Virology,* 231**, 231-238.

[99] Mangasarian, A., Foti, M., Aiken, C., Chin, D., Carpentier, J. L. and Trono, D. (1997) ***Immunity,* 6**, 67-77.

[100] Cluet, D., Bertsch, C., Beyer, C., Gloeckler, L., Erhardt, M., Gut, J. P., Galzi, J. L. and Aubertin, A. M. (2005) ***J. Virol.,*** **79**, 8629-8636.

[101] Harris, M. P. and Neil, J. C. (1994) ***J. Mol. Biol.,*** **241**, 136-142.

[102] Jin, Y. J., Zhang, X., Boursiquot, J. G. and Burakoff, S. J. (2004) ***J. Immunol.,*** **173**, 5495-5500.

[103] Rhee, S. S. and Marsh, J. W. (1994) ***J. Virol.,*** **68**, 5156-5163.

[104] Foti, M., Mangasarian, A., Piguet, V., Lew, D. P., Krause, K. H., Trono, D. and Carpentier, J. L. (1997) ***J. Cell Biol.,*** **139**, 37-47.

[105] Bresnahan, P. A., Yonemoto, W., Ferrell, S., Williams-Herman, D., Geleziunas, R. and Greene, W. C. (1998) ***Curr. Biol.,*** **8**, 1235-1238.

[106] Greenberg, M., DeTulleo, L., Rapoport, I., Skowronski, J. and Kirchhausen, T. (1998) ***Curr. Biol.,*** **8**, 1239-1242.

[107] Craig, H. M., Reddy, T. R., Riggs, N. L., Dao, P. P. and Guatelli, J. C. (2000) ***Virology,*** **271**, 9-17.

[108] Bonifacino, J. S. and Traub, L. M. (2003) ***Annu. Rev. Biochem.,*** **72**, 395-447.

[109] Marsh, M. and McMahon, H. T. (1999) ***Science,*** **285**, 215-220.

[110] McMahon, H. T. and Mills, I. G. (2004) ***Curr. Opin. Cell Biol.,*** **16**, 379-391.

[111] Robinson, M. S. (2004) ***Trends Cell Biol.,*** **14**, 167-174.

[112] Janvier, K., Craig, H., Hitchin, D., Madrid, R., Sol-Foulon, N., Renault, L., Cherfils, J., Cassel, D., Benichou, S. and Guatelli, J. (2003) ***J. Biol. Chem.,*** **278**, 8725-8732.

[113] Janvier, K., Kato, Y., Boehm, M., Rose, J. R., Martina, J. A., Kim, B. Y., Venkatesan, S. and Bonifacino, J. S. (2003) ***J. Cell Biol.,*** **163**, 1281-1290.

[114] Rose, J. J., Janvier, K., Chandrasekhar, S., Sekaly, R. P., Bonifacino, J. S. and Venkatesan, S. (2005) ***J. Biol. Chem.,*** **280**, 7413-7426.

[115] Blagoveshchenskaya, A. D., Thomas, L., Feliciangeli, S. F., Hung, C. H. and Thomas, G. (2002) ***Cell,*** **111**, 853-866.

[116] Le Gall, S., Buseyne, F., Trocha, A., Walker, B. D., Heard, J. M. and Schwartz, O. (2000) ***J. Virol.,*** **74**, 9256-9266.

[117] Greenberg, M. E., Bronson, S., Lock, M., Neumann, M., Pavlakis, G. N. and Skowronski, J. (1997) ***EMBO J.,*** **16**, 6964-6976.

[118] Geyer, M., Yu, H., Mandic, R., Linnemann, T., Zheng, Y. H., Fackler, O. T. and Peterlin, B. M. (2002) ***J. Biol. Chem.,*** **277**, 28521-28529.

[119] Lu, X., Yu, H., Liu, S. H., Brodsky, F. M. and Peterlin, B. M. (1998) ***Immunity,*** **8**, 647-656.

[120] Aridor, M. and Traub, L. M. (2002) ***Traffic,*** **3**, 537-546.

[121] Schmid, E. M., Ford, M. G., Burtey, A., Praefcke, G. J., Peak-Chew, S. Y., Mills, I. G., Benmerah, A. and McMahon, H. T. (2006) ***PLoS Biol.,*** **4**, e262.

[122] Jin, Y. J., Cai, C. Y., Zhang, X., Zhang, H. T., Hirst, J. A. and Burakoff, S. J. (2005) ***J. Immunol.,*** **175**, 3157-3164.

[123] Piguet, V., Gu, F., Foti, M., Demaurex, N., Gruenberg, J., Carpentier, J. L. and Trono, D. (1999) ***Cell,*** **97**, 63-73.

[124] Waters, M. G., Serafini, T. and Rothman, J. E. (1991) ***Nature,*** **349**, 248-251.

[125] Pepperkok, R., Scheel, J., Horstmann, H., Hauri, H. P., Griffiths, G. and Kreis, T. E. (1993) ***Cell,*** **74**, 71-82.

[126] Peter, F., Plutner, H., Zhu, H., Kreis, T. E. and Balch, W. E. (1993) ***J. Cell Biol.,*** **122**, 1155-1167.

[127] Aniento, F., Gu, F., Parton, R. G. and Gruenberg, J. (1996) ***J. Cell Biol.,*** **133**, 29-41.

[128] Daro, E., Sheff, D., Gomez, M., Kreis, T. and Mellman, I. (1997) ***J. Cell Biol.,*** **139**, 1747-1759.

[129] Gu, F., Aniento, F., Parton, R. G. and Gruenberg, J. (1997) ***J. Cell Biol.,*** **139**, 1183-1195.

[130] Whitney, J. A., Gomez, M., Sheff, D., Kreis, T. E. and Mellman, I. (1995) ***Cell,*** **83**, 703-713.

[131] Duden, R., Griffiths, G., Frank, R., Argos, P. and Kreis, T. E. (1991) ***Cell,*** **64**, 649-665.

[132] Benichou, S., Bomsel, M., Bodeus, M., Durand, H., Doute, M., Letourneur, F., Camonis, J. and Benarous, R. (1994) ***J. Biol. Chem.,*** **269**, 30073-30076.

[133] Daro, E., van der Sluijs, P., Galli, T. and Mellman, I. (1996) ***Proc. Natl. Acad. Sci. USA,*** **93**, 9559-9564.

[134] Foster, J. L., Molina, R. P., Luo, T., Arora, V. K., Huang, Y., Ho, D. D. and Garcia, J. V. (2001) ***J. Virol.,*** **75**, 1672-1680.

[135] Janvier, K., Craig, H., Le Gall, S., Benarous, R., Guatelli, J., Schwartz, O. and Benichou, S. (2001) ***J. Virol.,*** **75**, 3971-3976.

[136] Faure, J., Stalder, R., Borel, C., Sobo, K., Piguet, V., Demaurex, N., Gruenberg, J. and Trono, D. (2004) ***Curr. Biol.,*** **14**, 1056-1064.

[137] Pitcher, C., Honing, S., Fingerhut, A., Bowers, K. and Marsh, M. (1999) ***Mol. Biol. Cell,*** **10**, 677-691.

[138] Courgnaud, V., Abela, B., Pourrut, X., Mpoudi-Ngole, E., Loul, S., Delaporte, E. and Peeters, M. (2003) ***J. Virol.,*** **77**, 12523-12534.

[139] Courgnaud, V., Salemi, M., Pourrut, X., Mpoudi-Ngole, E., Abela, B., Auzel, P., Bibollet-Ruche, F., Hahn, B., Vandamme, A. M., Delaporte, E. and Peeters, M. (2002) ***J. Virol.,*** **76**, 8298-8309.

[140] Dazza, M. C., Ekwalanga, M., Nende, M., Shamamba, K. B., Bitshi, P., Paraskevis, D. and Saragosti, S. (2005) ***J. Virol.,*** **79**, 8560-8571.

[141] Takehisa, J., Bikandou, B., Ido, E., Mboudjeka, I., M'Vouenze, R., Nzoukoudi, M. Y., Harada, Y., Yamaguchi-Kabata, Y., Miura, T., M'Pandi, M., Parra, H. J., M'Pele, P. and Hayami, M. (1999) ***J. Med. Primatol.,*** **28**, 169-173.

[142] Willey, R. L., Maldarelli, F., Martin, M. A. and Strebel, K. (1992) ***J. Virol.,*** **66**, 7193-7200.

[143] Schwartz, S., Felber, B. K., Fenyo, E. M. and Pavlakis, G. N. (1990) ***J. Virol.,*** **64**, 5448-5456.

[144] Lee, Y. H., Schwartz, M. D. and Panganiban, A. T. (1997) ***Virology,*** **237**, 46-55.

[145] Yamada, T. and Iwamoto, A. (2000) ***Arch. Virol.,*** **145**, 1021-1027.

[146] Mackay, G. A., Niu, Y., Liu, Z. Q., Mukherjee, S., Li, Z., Adany, I., Buch, S., Zhuge, W., McClure, H. M., Narayan, O. and Smith, M. S. (2002) ***Virology,*** **295**, 133-146.

[147] Bour, S., Perrin, C. and Strebel, K. (1999) ***J. Biol. Chem.,*** **274**, 33800-33806.

[148] Cohen, E. A., Terwilliger, E. F., Sodroski, J. G. and Haseltine, W. A. (1988) ***Nature,*** **334**, 532-534.

[149] Klimkait, T., Strebel, K., Hoggan, M. D., Martin, M. A. and Orenstein, J. M. (1990) ***J. Virol.,*** **64**, 621-629.

[150] Geraghty, R. J., Talbot, K. J., Callahan, M., Harper, W. and Panganiban, A. T. (1994) ***J. Med. Primatol.,*** **23**, 146-150.

[151] Chen, M. Y., Maldarelli, F., Karczewski, M. K., Willey, R. L. and Strebel, K. (1993) ***J. Virol.,*** **67**, 3877-3884.

[152] Schubert, U., Anton, L. C., Bacik, I., Cox, J. H., Bour, S., Bennink, J. R., Orlowski, M., Strebel, K. and Yewdell, J. W. (1998) ***J. Virol.,*** **72**, 2280-2288.

[153] Meusser, B. and Sommer, T. (2004) ***Mol. Cell,*** **14**, 247-258.

[154] Meusser, B., Hirsch, C., Jarosch, E. and Sommer, T. (2005) ***Nat. Cell Biol.,*** **7**, 766-772.

[155] Huyer, G., Piluek, W. F., Fansler, Z., Kreft, S. G., Hochstrasser, M., Brodsky, J. L. and Michaelis, S. (2004) ***J. Biol. Chem.,*** **279**, 38369-38378.

[156] Bour, S., Schubert, U. and Strebel, K. (1995) ***J. Virol.,*** **69**, 1510-1520.

[157] Tiganos, E., Yao, X. J., Friborg, J., Daniel, N. and Cohen, E. A. (1997) ***J. Virol.,*** **71**, 4452-4460.

[158] Margottin, F., Bour, S. P., Durand, H., Selig, L., Benichou, S., Richard, V., Thomas, D., Strebel, K. and Benarous, R. (1998) ***Mol. Cell.,*** **1**, 565-574.

[159] Lassot, I., Segeral, E., Berlioz-Torrent, C., Durand, H., Groussin, L., Hai, T., Benarous, R. and Margottin-Goguet, F. (2001) ***Mol. Cell. Biol.,*** **21**, 2192-2202.

[160] Orian, A., Gonen, H., Bercovich, B., Fajerman, I., Eytan, E., Israel, A., Mercurio, F., Iwai, K., Schwartz, A. L. and Ciechanover, A. (2000) ***EMBO J.,*** **19**, 2580-2591.

[161] Winston, J. T., Strack, P., Beer-Romero, P., Chu, C. Y., Elledge, S. J. and Harper, J. W. (1999) ***Genes Dev.,*** **13**, 270-283.

[162] Wu, G., Xu, G., Schulman, B. A., Jeffrey, P. D., Harper, J. W. and Pavletich, N. P. (2003) ***Mol. Cell,*** **11**, 1445-1456.

[163] Bour, S., Perrin, C., Akari, H. and Strebel, K. (2001) ***J. Biol. Chem.,*** **276**, 15920-15928.

[164] Akari, H., Bour, S., Kao, S., Adachi, A. and Strebel, K. (2001) ***J. Exp. Med.,*** **194**, 1299-1311.

[165] Schubert, U., Henklein, P., Boldyreff, B., Wingender, E., Strebel, K. and Porstmann, T. (1994) ***J. Mol. Biol.,*** **236**, 16-25.

[166] Schubert, U., Schneider, T., Henklein, P., Hoffmann, K., Berthold, E., Hauser, H., Pauli, G. and Porstmann, T. (1992) ***Eur. J. Biochem.,*** **204**, 875-883.

[167] Coadou, G., Gharbi-Benarous, J., Megy, S., Bertho, G., Evrard-Todeschi, N., Segeral, E., Benarous, R. and Girault, J. P. (2003) ***Biochemistry,*** **42**, 14741-14751.

[168] Evrard-Todeschi, N., Gharbi-Benarous, J., Bertho, G., Coadou, G., Megy, S., Benarous, R. and Girault, J. P. (2006) ***Peptides,* 27**, 194-210.

[169] Megy, S., Bertho, G., Gharbi-Benarous, J., Evrard-Todeschi, N., Coadou, G., Segeral, E., Iehle, C., Quemeneur, E., Benarous, R. and Girault, J. P. (2005) ***J. Biol. Chem.,* 280**, 29107-29116.

[170] Paul, M. and Jabbar, M. A. (1997) ***Virology,* 232**, 207-216.

[171] Gomez, L. M., Pacyniak, E., Flick, M., Hout, D. R., Gomez, M. L., Nerrienet, E., Ayouba, A., Santiago, M. L., Hahn, B. H. and Stephens, E. B. (2005) ***Virology,* 335**, 46-60.

[172] Leitner, T., Foley, B., Hahn, B., Marx, P., McCutchan, F., Mellors, J., Wolinsky, S., Korber, B. and eds. (eds). (2005) ***HIV Sequence Compendium 2005***. Theoretical Biology and Biophysics Group, Los Alamos National Laboratory, Los Alamos, NM.

[173] Stephens, E. B., McCormick, C., Pacyniak, E., Griffin, D., Pinson, D. M., Sun, F., Nothnick, W., Wong, S. W., Gunderson, R., Berman, N. E. and Singh, D. K. (2002) ***Virology,* 293**, 252-261.

[174] Singh, D. K., McCormick, C., Pacyniak, E., Lawrence, K., Dalton, S. B., Pinson, D. M., Sun, F., Berman, N. E., Calvert, M., Gunderson, R. S., Wong, S. W. and Stephens, E. B. (2001) ***Virology,* 282**, 123-140.

[175] Singh, D. K., Griffin, D. M., Pacyniak, E., Jackson, M., Werle, M. J., Wisdom, B., Sun, F., Hout, D. R., Pinson, D. M., Gunderson, R. S., Powers, M. F., Wong, S. W. and Stephens, E. B. (2003) ***Virology,* 313**, 435-451.

[176] Olszewski, A., Sato, K., Aron, Z. D., Cohen, F., Harris, A., McDougall, B. R., Robinson, W. E., Jr., Overman, L. E. and Weiss, G. A. (2004) ***Proc. Natl. Acad. Sci. USA,* 101**, 14079-14084.

[177] Geyer, M., Munte, C. E., Schorr, J., Kellner, R. and Kalbitzer, H. R. (1999) ***J. Mol. Biol.,* 289**, 123-138.

[178] DeLano, W. L. (2002) ***The PyMOL User's Manual***. DeLano Scientific, San Carlos, CA.

[179] Park, S. H., Mrse, A. A., Nevzorov, A. A., Mesleh, M. F., Oblatt-Montal, M., Montal, M. and Opella, S. J. (2003) ***J. Mol. Biol.,* 333**, 409-424.

[180] Willbold, D., Hoffmann, S. and Rosch, P. (1997) ***Eur. J. Biochem.,* 245**, 581-588.

Received: September 09, 2006Revised: November 16, 2006Accepted: Novmeber 17, 2006